Quester Tangent Corporation

Southeastern Pennsylvania Transportation Authority (SEPTA)
Silverliner V

Central Diagnostic System (CDS)

Communications Car Monitoring Network Interface Control Document

Prepared by: **Jason Hannula**
Network Integration Engineer

Verified by: **Jim Kightley**
Project Engineer

Approved by: **Jim Kightley**
Project Engineer

Issue Date: June 8, 2007
Document Number: DDN-T097-0091
Revision: R01

QUESTER TANGENT™
Making Data Intelligent™

DATE	REVISION	DESCRIPTION
06-Feb-2007	R00	Initial release.
08-Jun-2007	R01	Node documentation and implementation details added to all sections.

COPYRIGHT

Copyright © 2007 by Quester Tangent Corporation. All rights reserved. This item and the information contained herein are the property of Quester Tangent Corporation. No part of this document may be reproduced, transmitted, stored in a retrieval system, or translated into any language or computer language in any form or by any means, electronic, mechanical, magnetic, optical, chemical, manual, or otherwise, without the express written permission of Quester Tangent Corporation.

Quester Tangent Corporation
Marine Technology Centre
201-9865 West Saanich Road
Sidney, B.C., Canada V8L 5Y8
Tel: 250-656-6677
Fax: 250-655-4696

Table of Contents

1 Introduction 5
2 Network Physical Layer Interface Design 5
3 Network Management 5
3.1 Node Documentation 6
3.1.1 Node Self-Documentation String 6
3.1.2 Node Program ID 6
4 Network Node 6
4.1 Node Object – Object #0 8
4.1.1 nvi00ObjRequest 8
4.1.2 nvo00ObjStatus 8
4.1.3 nvi00CDTCommand 8
4.1.4 nvo00TimeStamp 8
4.1.5 nvi00FileReqA 9
4.1.6 nvo00FileStatA 9
4.1.7 nvi00FileReqB 9
4.1.8 nvo00FileStatB 9
4.1.9 nci00NetConfig 9
4.2 Monitoring Object – Object #1 10
4.2.1 nvi01Subscribe 10
4.2.2 nvo01StatusBits 10
4.2.3 nvi01TransferState 12
4.2.4 nvo01Parameter 13
4.3 SCI Update Object – Object #2 13
4.3.1 nvi02SCIUpdateReq 13
4.3.2 nvo02SCIUpdateResp 13
4.4 SCI Version Object – Object #3 14
4.4.1 nvi03SCIVersionReq 14
4.4.2 nvo03SCIVersion 14
4.5 Wayside Data Transfer Object – Object #4 14
4.5.1 nvi04WaysideRespA 14
4.5.2 nvo04WaysideReqA 15
4.5.3 nvi04WaysideRespB 15
4.5.4 nvo04WaysideReqB 15
5 Network Interface 15
5.1 General 15
5.2 Subsystem Specific Network Interface Declarations 15

5.2.1 UNVT_CDT_command 16
5.2.2 UNVT_wayside_request 16
5.2.3 UNVT_wayside_response 16
5.3 Software Update 17
5.4 File Transfers 17
5.4.1 Wayside File Transfer Details 17
6 Self-Installation Data 20
6.1 Domain Configuration 20
6.2 Location Configuration 20
6.3 Address Configuration 20
6.4 Network Variable Configuration 21

List of Figures

Figure 1: Communications Node 7
Figure 2: Wayside File Transfer - Single Block 18
Figure 3: Wayside File Transfer - Multiple Blocks 19

List of Tables

Table 1: Communications Subsystem – Network Physical Layer Interface Design 5
Table 2: CDT Commands 8
Table 3: Status Data Sent to CDT 10
Table 4: Parameter Data Sent to CDT 13
Table 5: SCI Index Number Assignment 14
Table 6: SCI Information 14
Table 7: Wayside File Transfer Request Types 16
Table 8: Wayside File Transfer Response Types 17
Table 9: File Transfers 17
Table 10: Address Table 20
Table 11: Network Variable Configuration 21

1 Introduction

This document defines the Communications subsystem specific interface to the car monitoring network described in the Car Monitoring Network ICD (DDN-T097-0080).

This document is intended as the main tool for development and integration of the Communications subsystem onto the train for the supplier as well as for Rotem and Quester Tangent.

Information contained in this document is essential to the supplier in order to complete the software that will implement the Car Monitoring Network interface. For this reason, any updates of the information contained in this document will be made available to the supplier with the shortest possible delay.

This release of the document captures information from the subsystem supplier provided in an initial template (DDN-T097-0082), meetings with the supplier and the supplier's review of a draft version of this document and DDN-T097-0080-R02. This release will be submitted for the CDS DDP package.

2 Network Physical Layer Interface Design

Table 1 documents the Communications subsystem's network physical layer interface design. The design does not conform to the Car Monitoring Network ICD Section 4 requirements where noted.

Table 1: Communications Subsystem – Network Physical Layer Interface Design

Feature	Subsystem Info	Notes
Network processor	FT3150	
Transceiver type	FT-X1	
LEDs (Tx, Rx, Service)	Tx, Rx, Service	
Service pushbutton	Yes	
Common mode isolation choke	Yes	
Magnetic shield	No	Non-conforming
Surge absorbing flash tubes	Yes	
Submit subsystem network interface design for review by QT?	Will submit to QT for review on request	

3 Network Management

The subsystem shall be capable of self-installation, i.e. set the system's own network configuration without intervention by a network management tool. Full details of the required settings are provided in the current versions of the Car Monitoring Network ICD document (DDN-T097-0080) and in this document.

All nodes shall support possible future usage of a network management tool, as described in the Car Monitoring Network ICD document.

3.1 Node Documentation

3.1.1 Node Self-Documentation String

The Neuron C source code declaration shall be:

```
#pragma set_node_sd_string "COMM, Meister, PPPP, DDDD"
```

PPPP:	Supplier part number
DDDD:	Neuron SCI revision date

3.1.2 Node Program ID

The Neuron C source code declaration shall be:

```
#pragma set_id_string "COMM"
```

4 Network Node

Figure 1 shows the Communications Node functional blocks, network variables and configuration properties. The following subsections provide network variable and configuration property details.

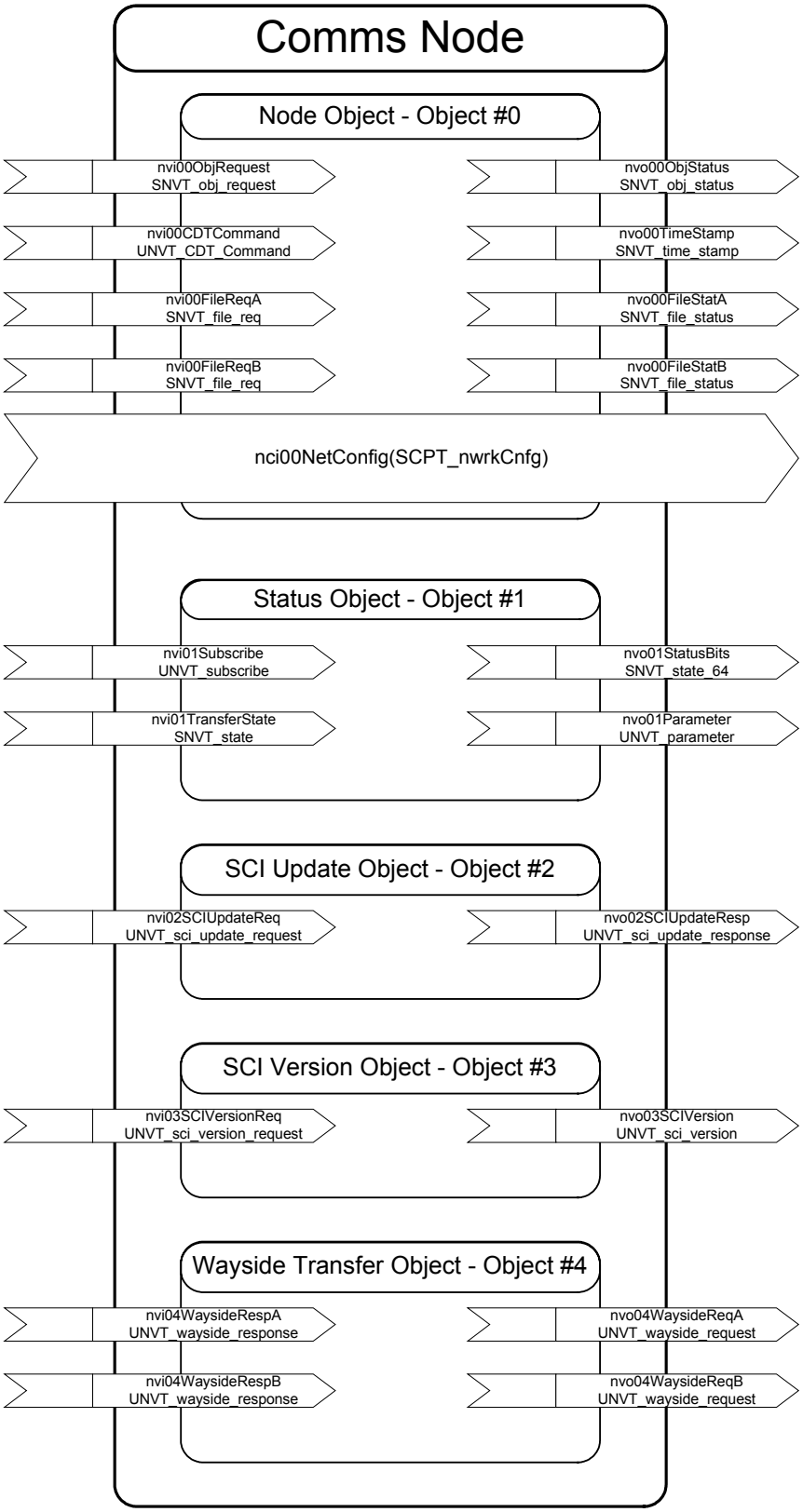

Figure 1: Communications Node

4.1 Node Object – Object #0

4.1.1 nvi00ObjRequest

Declaration: network input sd_string("@0|1") SNVT_obj_request nvi00ObjRequest

Description: Mandatory variable defined in LonMark Functional Profile: Node Object, LonMark SNVT Master List. This input variable provides the mechanism to request a particular mode for the node as a whole.

4.1.1.1 Data Value

Refer to the SNVT Master List and DDN-T097-0080 for request types supported.

4.1.2 nvo00ObjStatus

Declaration: network output sd_string("@0|2") SNVT_obj_status nvo00ObjStatus

Description: Mandatory variable defined in LonMark Functional Profile: Node Object, LonMark SNVT Master List. This output variable reports the general status of the node.

Destination: CDT

4.1.2.1 Data Value

Refer to the SNVT Master List and DDN-T097-0080 for status items supported.

4.1.3 nvi00CDTCommand

Declaration: network input sd_string("@0|3") UNVT_CDT_command nvi00CDTCommand

Description: Command from the CDT. See section 5.2.1 for the description of this data structure.

4.1.3.1 Data Value

Table 2: CDT Commands

ID	CDTCommand	Argument	System Info	Notes
1	Broadcast Time	Unused		CDT command will be sent at network startup and as required.

All other nvi00CDTCommand values shall be ignored.

4.1.4 nvo00TimeStamp

Declaration: network output sd_string("@0|4") SNVT_time_stamp nvo00TimeStamp

Description: The Communications subsystem shall provide the current UTC time to all other subsystems (T.S. 9.9) i.e. to all nodes in the car or married pair.

Destination: Domain Broadcast

4.1.4.1 Data Value

Current time in UTC format.

4.1.5 nvi00FileReqA

Declaration: network input sd_string("@0|5") SNVT_file_req nvi00FileReqA

Description: Receives requests from the CDT (Single car or Car A married pair), used to control file transfer of a new software image or for wayside transfer.

4.1.5.1 Data Value

See DDN-T097-0080 section 7.2.

4.1.6 nvo00FileStatA

Declaration: network output sd_string("@0|6") SNVT_file_status nvo00FileStatA

Description: Sends file transfer status to the CDT during transfer of a new software image or wayside transfer.

Destination: CDT (Single car or Car A of married pair)

4.1.6.1 Data Value

See DDN-T097-0080 section 7.2.

4.1.7 nvi00FileReqB

Declaration: network input sd_string("@0|7") SNVT_file_req nvi00FileReqB

Description: Receives requests from the CDT (car B of Married Pair), used to control file transfer of a new software image or for wayside transfer.

4.1.7.1 Data Value

See DDN-T097-0080 section 7.2.

4.1.8 nvo00FileStatB

Declaration: network output sd_string("@0|8") SNVT_file_status nvo00FileStatB

Description: Sends file transfer status to the CDT during transfer of a new software image or wayside transfer.

Destination: CDT (Car B of married pair)

4.1.8.1 Data Value

See DDN-T097-0080 section 7.2.

4.1.9 nci00NetConfig

Declaration: config network input sd_string("&0,,0\x90,25;") SCPTnwrkCnfg nci00NetConfig

Description: All nodes must support self-installation and provide a configuration property to allow a network tool to override the node's self-installation procedure. If the value of this variable is set to CFG_EXTERNAL when the node is reset or powers up, then the node shall not execute any of its self-installation functions. See DDN-T097-0080 section 6.3.5 for details.

4.1.9.1 Preset Value

This variable shall be initialized to CFG_LOCAL when subsystem software is reloaded and when units are delivered from the factory.

4.2 Monitoring Object – Object #1

4.2.1 nvi01Subscribe

Declaration: network input sd_string("@1|1") UNVT_subscribe nvi01Subscribe

Description: Used by the CDT to set the required transmission rate for monitoring data sent to the CDT.

4.2.1.1 Data Value

See DDN-T097-0080 section 6.4.3.

4.2.2 nvo01StatusBits

Declaration: network output sd_string("@1|2") SNVT_state_64 nvo01StatusBits

Description: Current subsystem status.

Destination: CDT

4.2.2.1 Data Value

The following table defines the status bit assignments.

When the fault severity levels are provided by the subsystem supplier, the mapping to CDT internal representation of severity level are listed in the table. CDT mappings of severity level are subject to review and finalization.

Table 3: Status Data Sent to CDT

Index	Description	Values	Severity level (Note 1)	CDT Severity Level (Note 2)	Maintenance Action (Note 3)	Notes
0	CIU A Section Failure	0 = OK 1 = Fail	failure		TBD	
1	PEI 1 A Section Failure	0 = OK 1 = Fail	failure		TBD	
2	PEI 2 A Section Failure	0 = OK 1 = Fail	failure		TBD	
3	PEI 3 A Section Failure	0 = OK 1 = Fail	failure		TBD	
4	DCU-M 1 A Section Failure	0 = OK 1 = Fail	failure		TBD	
5	DCU-S 1.1 A Section Failure	0 = OK 1 = Fail	failure		TBD	
6	DCU-S 1.2 A Section Failure	0 = OK 1 = Fail	failure		TBD	

Index	Description	Values	Severity level (Note 1)	CDT Severity Level (Note 2)	Maintenance Action (Note 3)	Notes
7	DCU-S 1.3 A Section Failure	0 = OK 1 = Fail	failure		TBD	
8	DCU-M 2 A Section Failure	0 = OK 1 = Fail	failure		TBD	
9	DCU-S 2.1 A Section Failure	0 = OK 1 = Fail	failure		TBD	
10	DCU-S 2.2 A Section Failure	0 = OK 1 = Fail	failure		TBD	
11	DCU-S 2.3 A Section Failure	0 = OK 1 = Fail	failure		TBD	
12	CIU B Section Failure	0 = OK 1 = Fail	failure		TBD	
13	PEI 1 B Section Failure	0 = OK 1 = Fail	failure		TBD	Married pair only
14	PEI 2 B Section Failure	0 = OK 1 = Fail	failure		TBD	Married pair only
15	PEI 3 B Section Failure	0 = OK 1 = Fail	failure		TBD	Married pair only
16	DCU-M 1 B Section Failure	0 = OK 1 = Fail	failure		TBD	Married pair only
17	DCU-S 1.1 B Section Failure	0 = OK 1 = Fail	failure		TBD	Married pair only
18	DCU-S 1.2 B Section Failure	0 = OK 1 = Fail	failure		TBD	Married pair only
19	DCU-S 1.3 B Section Failure	0 = OK 1 = Fail	failure		TBD	Married pair only
20	DCU-M 2 B Section Failure	0 = OK 1 = Fail	failure		TBD	Married pair only
21	DCU-S 2.1 B Section Failure	0 = OK 1 = Fail	failure		TBD	Married pair only
22	DCU-S 2.2 B Section Failure	0 = OK 1 = Fail	failure		TBD	Married pair only
23	DCU-S 2.3 B Section Failure	0 = OK 1 = Fail	failure		TBD	Married pair only
24	Interior Sign A Section Failure	0 = OK 1 = Fail	failure		TBD	
25	Interior Sign B Section Failure	0 = OK 1 = Fail	failure		TBD	
26	Dest Sign A Section Failure	0 = OK 1 = Fail	failure		TBD	
27	Side Sign 1 A Section Failure	0 = OK 1 = Fail	failure		TBD	

Index	Description	Values	Severity level (Note 1)	CDT Severity Level (Note 2)	Maintenance Action (Note 3)	Notes
28	Side Sign 2 A Section Failure	0 = OK 1 = Fail	failure		TBD	
29	Side Sign 3 A Section Failure	0 = OK 1 = Fail	failure		TBD	
30	Side Sign 4 A Section Failure	0 = OK 1 = Fail	failure		TBD	
31	Dest Sign B Section Failure	0 = OK 1 = Fail	failure		TBD	
32	Side Sign 1 B Section Failure	0 = OK 1 = Fail	failure		TBD	Married pair only
33	Side Sign 2 B Section Failure	0 = OK 1 = Fail	failure		TBD	Married pair only
34	Side Sign 3 B Section Failure	0 = OK 1 = Fail	failure		TBD	Married pair only
35	Side Sign 4 B Section Failure	0 = OK 1 = Fail	failure		TBD	Married pair only
36	EBIS5 A Section Failure	0 = OK 1 = Fail	failure		TBD	
37	EBIS5 B Section Failure	0 = OK 1 = Fail	failure		TBD	
38	VAC A Section Failure	0 = OK 1 = Fail	failure		TBD	
39	VAC B Section Failure	0 = OK 1 = Fail	failure		TBD	
40	ATAS Failure	0 = OK 1 = Fail	failure		TBD	
41–55	Reserved for future usage	0				
56–63	Counter	0 – 255	N/A			Incremented on transmission, wraps around from 255 to 0.

Note 1: Values to be provided the subsystem supplier.

Note 2: Level 0 indicates operational status information.
Level 1 indicates most severe fault and Level 4 indicates least severe fault.

Note 3: Subsystem supplier shall provide maintenance notes for each data item.

4.2.3 nvi01TransferState

Declaration: network input sd_string("@1|3") SNVT_state nvi01TransferState

Description: Used by CDT to suspend network traffic during file transfer operations.

4.2.3.1 Data Value

See DDN-T097-0080 section 6.4.7.

4.2.4 nvo01Parameter

Declaration: network output sd_string("@1|4") UNVT_parameter nvo01Parameter

Description: Current values of various numeric quantities. This network variable is provided for future use. There are no numeric quantities identified at this time for the subsystem.

Destination: CDT

4.2.4.1 Data Value

The following table defines the numeric parameter ID assignments.

Table 4: Parameter Data Sent to CDT

ID	Description	Units or scale/offset	Available Update Rate (Note 1)	Transmission Rate (Note 2)	Notes
1	For future use				

Note 1: Typical time interval to observe a change.

Note 2: Transmission rate set by CDT subscription.

4.3 SCI Update Object – Object #2

4.3.1 nvi02SCIUpdateReq

Declaration: network input sd_string("@2|1") UNVT_sci_update_request nvi02SCIUpdateReq

Description: Used by CDT to request SCI update.

4.3.1.1 Data Value

See DDN-T097-0080 section 6.6.1.

4.3.2 nvo02SCIUpdateResp

Declaration: network output sd_string("@2|2") UNVT_sci_update_response nvo02SCIUpdateResp

Description: Used by subsystem to respond to CDT update requests.

Destination: CDT

4.3.2.1 Data Value

See DDN-T097-0080 section 6.6.2.

4.4 SCI Version Object – Object #3

4.4.1 nvi03SCIVersionReq

Declaration: network input sd_string("@3|1") UNVT_sci_version_request nvi03SCIVersionReq

Description: Used by CDT to request SCI version information. SCI identified by index number.

4.4.1.1 Data Value

The following table defines the SCI index number assignments.

Table 5: SCI Index Number Assignment

SCI INDEX	SCI NAME (NOTE 1)	UPDATE FROM CDT? (NOTE 1)
1	TBD	TBD

Note 1: To be provided by subsystem supplier. See DDN-T097-0080 (Section 6.6.1 nvoSCIUpdateReq) for details.

4.4.2 nvo03SCIVersion

Declaration: network output sd_string("@3|2") UNVT_sci_version nvo03SCIVersion

Description: Populated by subsystem with requested SCI version information.

Destination: CDT

4.4.2.1 Data Value

The following table documents SCI information.

Table 6: SCI Information

SCI INDEX	SCI NAME (NOTE 1)	SCI TYPE (NOTE 1)	SCI NAME (8 CHAR) (NOTE 1)
1	TBD		

Note 1: To be provided by subsystem supplier. See DDN-T097-0080 (Section 6.7.2 nvoSCIVersion) for details.

4.5 Wayside Data Transfer Object – Object #4

4.5.1 nvi04WaysideRespA

Declaration: network input sd_string("@4|1") UNVT_wayside_response nvi04WaysideRespA

Description: Response from a CDT (Single car or Car A of married pair) in support of Wayside data transfer. See section 5.2.3 for the description of the data structure.

4.5.1.1 Data Value

See section 5.2.3.

4.5.2 nvo04WaysideReqA

Declaration: network output sd_string("@4|2") UNVT_wayside_request nvo04WaysideReqA

Description: Signals the CDT to manage the Wayside file transfer. See section 5.2.2 for the description of the data structure.

Destination: CDT (Single car or Car A of married pair)

4.5.2.1 Data Value

See section 5.2.2.

4.5.3 nvi04WaysideRespB

Declaration: network input sd_string("@4|3") UNVT_wayside_response nvi04WaysideRespB

Description: Response from a CDT (Car B of married pair) in support of Wayside data transfer. See section 5.2.3 for the description of the data structure.

4.5.3.1 Data Value

See section 5.2.3.

4.5.4 nvo04WaysideReqB

Declaration: network output sd_string("@4|4") UNVT_wayside_request nvo04WaysideReqB

Description: Signals the CDT to manage the Wayside file transfer. See section 5.2.2 for the description of the data structure.

Destination: CDT (Car B of married pair)

4.5.4.1 Data Value

See section 5.2.2.

5 Network Interface

5.1 General

The Communications subsystem complies with the general monitoring scheme defined in DDN-T097-0080 section 6.

5.2 Subsystem Specific Network Interface Declarations

Declarations in this section use Neuron C conventions, i.e. ‘short’ is an 8-bit value, ‘long’ is 16-bits and ‘quad’ is 32-bits.

5.2.1 UNVT_CDT_command

UNVT_CDT_command structure declaration:

```
typedef struct {
      unsigned short    command_id;
      unsigned long     command_arg;
} UNVT_CDT_command;
```

Field descriptions:

- command_id: Identifies the command that is being sent; its valid range is 1 to 255. A value of 0 shall not be used.
- command_arg: Optional argument to the command. It shall be set to 0 if the argument is unused.

5.2.2 UNVT_wayside_request

UNVT_wayside_request structure declaration:

```
typedef struct {
      unsigned short    request;
      unsigned quad     time_stamp;
} UNVT_wayside_request;
```

Field descriptions:

- request: Identifies the Wayside processing transfer request. A value of 0 shall not be used.
- time_stamp: Time reference for the last received log entry. Time is stored as seconds since midnight Jan 1, 2000.

Table 7: Wayside File Transfer Request Types

REQUEST NUMBER	REQUEST NAME	TIMESTAMP	DESCRIPTION
1	Start Recent Faults	Ignored	Used to initiate transfer of filtered CDT log entries. CDT maintains timestamp from last successful transfer and will ignore any time_stamp data.
2	Ack Recent Faults	Required	Used to acknowledge the Recent Faults transfer. The timestamp confirms the last successfully received entry.
3	Start Historical	Required	Used to initiate transfer of complete CDT log. Comms populates the time_stamp data from Wayside request. If time_stamp set to NULL, CDT will begin file transfer from last successful confirmed Historical transfer. The Start Historical is also used to confirm the last block of Historical transfer and to initiate the next block.
4	Ack Historical	Required	Used to acknowledge the last block of Historical transfer. Time_stamp is set to the last successfully received entry.

5.2.3 UNVT_wayside_response

UNVT_wayside_response structure declaration:

```
typedef struct {
      unsigned short    response;
} UNVT_wayside_response;
```

Field descriptions:

- response: Identifies the CDT response to Wayside processing transfer requests. A value of 0 shall not be used.

Table 8: Wayside File Transfer Response Types

RESPONSE NUMBER	RESPONSE NAME	DESCRIPTION
1	Yes	New entries recorded in CDT log since last transfer (Recent Faults type) or since time stamp requested (Historical type). The CDT will initiate a file transfer of the type requested.
2	No	No new entries available. The CDT will not initiate a file transfer.

5.3 Software Update

Subsystem supplier shall review DDN-T097-0080 and provide feedback on SCI update requirements, i.e. is system reset required, what metadata is required by subsystem to verify the SCI file transfer, etc.

5.4 File Transfers

Table 9: File Transfers

Index	File Type	Sender	Receiver	Initiator	Notes
257	SCI Update	CDT	Comms	CDT	
301	Wayside File	CDT	Comms	CDT	Used for both Recent Faults and Historical

5.4.1 Wayside File Transfer Details

Note: Only preliminary details of Wayside processing are available at this time, pending detailed interface discussions with the supplier of the wayside database system.

Two different wayside file transfers are defined for the CDT: Recent Faults and Historical. The Communications subsystem shall determine which transfer type is appropriate based on location. The Communications subsystem shall be responsible for ensuring successful delivery of the transferred data.

The Communications subsystem shall be responsible for signalling each CDT for file transfers in a married pair configuration. These transfers shall occur sequentially so as to avoid network congestion.

The wayside file transfer protocol is as described in Echelon LonWorks Engineering Bulletin: File Transfer. The following modifications are required:

- File Packet Size = 128 data bytes (standard protocol uses 32 bytes)

The following figures illustrate the sequence of messages between the Communications subsystem and the CDT for wayside file transfers. Figure 2 shows the messages for transferring a single block of CDT log. This will be typical for the transfer of Recent Faults. Figure 3 shows the messages for transferring multiple blocks of CDT log. This will be typical for the transfer of Historical logs.

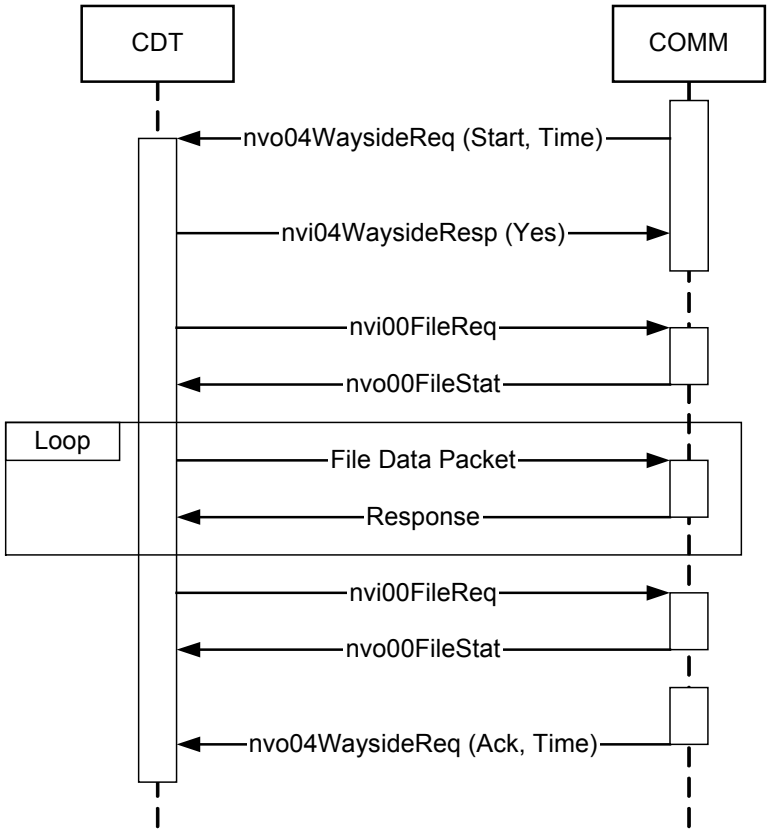

Figure 2: Wayside File Transfer - Single Block

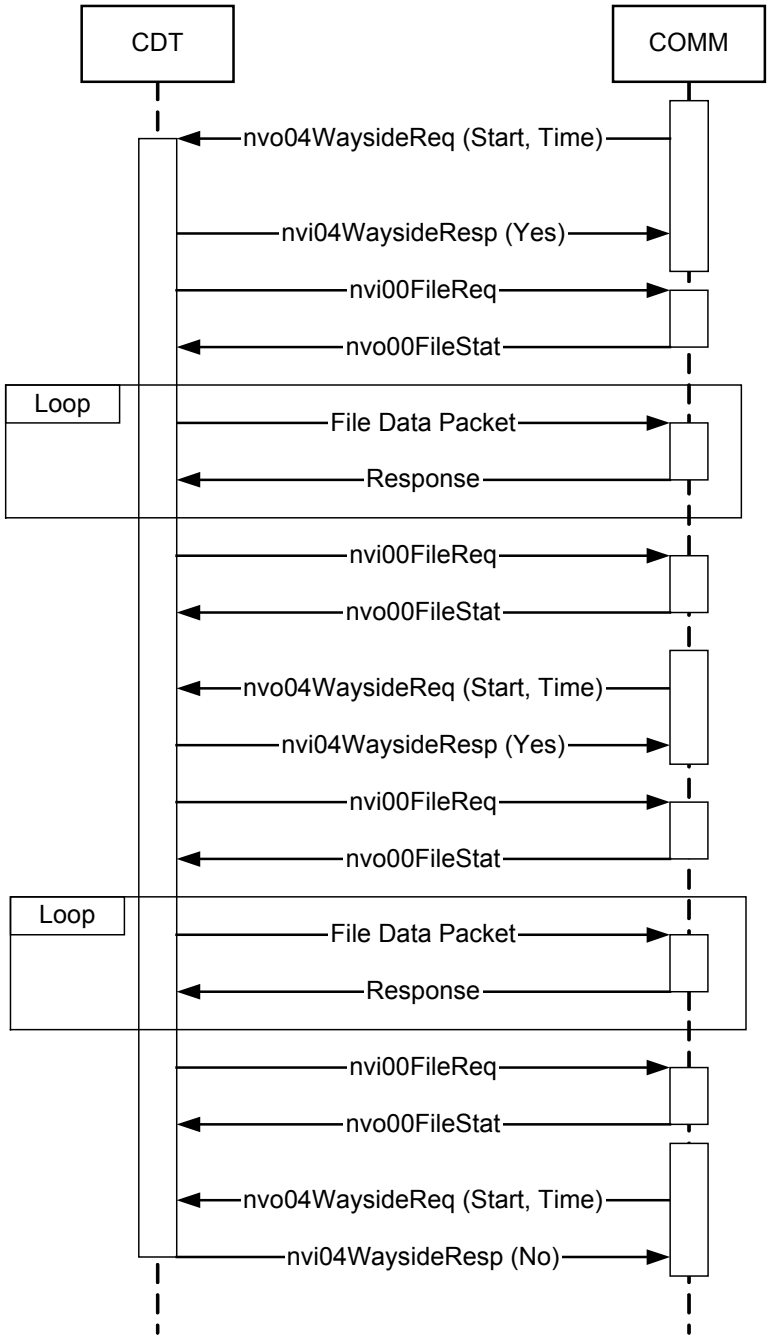

Figure 3: Wayside File Transfer - Multiple Blocks

6 Self-Installation Data

The following tables define the data needed to configure the node's network image to support self-installation.

6.1 Domain Configuration

Refer to DDN-T097-0080 section 5.1 for domain configuration details.

6.2 Location Configuration

The Neuron C source code configuration data declaration shall include:

```
config_data.location[0] = 'C';
config_data.location[1] = 'O';
config_data.location[2] = 'M';
config_data.location[3] = 'M';
config_data.location[4] = ' ';
config_data.location[5] = ' ';
```

6.3 Address Configuration

Table 10: Address Table

ENTRY	TYPE	DOMAIN	NODE	REPEAT TIMER	RETRY	RECEIVE TIMER	TRANSMIT TIMER	SUBNET
0	1	0	1	0	3	0	4	1
1	1	0	1	0	3	0	4	2
2	3	0	0	3	2	0	0	0
3	0	0	0	0	0	0	0	0
4	0	0	0	0	0	0	0	0
5	0	0	0	0	0	0	0	0
6	0	0	0	0	0	0	0	0
7	0	0	0	0	0	0	0	0
8	0	0	0	0	0	0	0	0
9	0	0	0	0	0	0	0	0
10	0	0	0	0	0	0	0	0
11	0	0	0	0	0	0	0	0
12	0	0	0	0	0	0	0	0
13	0	0	0	0	0	0	0	0
14	0	0	0	0	0	0	0	0

6.4 Network Variable Configuration

Table 11: Network Variable Configuration

ENTRY	VARIABLE	DIRECTION	PRIO	SERVICE	SELECTOR	ADDRESS INDEX
0	nci00NetConfig	0 (IN)	0	ACKD	0x0816	0x0F
1	nvi00ObjRequest	0 (IN)	0	ACKD	0x0801	0x0F
2	nvo00ObjStatus	1 (OUT)	0	ACKD	0x0802	0x00
3	nvo00TimeStamp	1 (OUT)	0	UNACKD_RPT	0x0803	0x02
4	nvi00FileReqA	0 (IN)	0	ACKD	0x0804	0x0F
5	nvo00FileStatA	1 (OUT)	0	ACKD	0x0805	0x00
6	nvi00FileReqB	0 (IN)	0	ACKD	0x0884	0x0F
7	nvo00FileStatB	1 (OUT)	0	ACKD	0x0885	0x01
8	nvi00CDTCommand	0 (IN)	0	ACKD	0x0811	0x0F
9	nvi01Subscribe	0 (IN)	0	ACKD	0x0806	0x0F
10	nvi01TransferState	0 (IN)	0	UNACKD	0x0109	0x0F
11	nvo01StatusBits	1 (OUT)	0	ACKD	0x080A	0x00
12	nvo01Parameter	1 (OUT)	0	UNACKD	0x080C	0x00
13	nvi02SCIUpdateReq	0 (IN)	0	ACKD	0x080D	0x0F
14	nvo02SCIUpdateResp	1 (OUT)	0	ACKD	0x080E	0x00
15	nvi03SCIVersionReq	0 (IN)	0	ACKD	0x080F	0x0F
16	nvo03SCIVersion	1 (OUT)	0	ACKD	0x0810	0x00
17	nvi04WaysideReqA	1 (OUT)	0	ACKD	0x0114	0x00
18	nvo04WaysideRespA	0 (IN)	0	ACKD	0x0115	0x0F
19	nvi04WaysideReqB	1 (OUT)	0	ACKD	0x0194	0x01
20	nvo04WaysideRespB	0 (IN)	0	ACKD	0x0195	0x0F

Note 1: Turnaround and Authentication are set to zero (0) for all variables listed.